Deep Insights, Smart Moves: Advancing Traffic Prediction with Hybrid LSTM-GCN Architectures

Xinyang Zhang & Zhiying Tang

Summary

This paper is about the study of traffic flow and its trajectory optimization. With the acceleration of urbanization, traffic congestion and road complexity are becoming more and more serious. Therefore, the establishment of accurate traffic prediction model is of great practical significance to improve urban trajectory and facilitate people's travel.

Four datasets are studied in this paper: the Microsoft T-Drive trajectory dataset, the PeMS04 & PeMS08 dataset, and the Beijing_sevenpart dataset. The data set includes GPS tracks of more than 10,000 taxis, real-time traffic conditions over two working days, and highway traffic information.

First of all, through road network matching, this paper uses K-means and Dijkstra algorithm to calculate the optimal path of the vehicle and gives the visual effect. The paper then use LSTM to predict the next point by entering a sequence of five points, and verify its reliability in the test set. Then the model is trained by adjusting the hyperparameters of the model and its effect is evaluated. The visual prediction effect is given in the paper. After that, this paper uses GCN to analyze and predict traffic flow data, monitors the change rate of loss function, adds random seeds to increase the generalization of the model, and evaluates the model with MSE, RMSE, MAPE and Total Loss to ensure the effectiveness and reliability of the model. Then, based on the speed data in the beijing_sevenpart, the paper infers the average speed of each section and assigns it to each section as a time weight. Then, Dijkstra algorithm is used to plan a variable shortest path with time weight.

In summary, based on the given data set, this paper builds a traffic prediction model, which is not only innovative in technology, but also has practical significance in application. This traffic prediction model provides a strong support for intelligent transportation system by carrying out shortest path planning for vehicles. In addition, the model can be used for real-time vehicle navigation and improve the intelligent level of urban traffic, which has important social and economic practical value.

The source code of this model can be obtained from https://github.com/Gmasterzhangxinyang/code-for-big-data-Competition

Keywords: Optimal path planning, Dijkstra, K-means, LSTM, GCN, Traffic flow prediction

Contents

1 Introduction **2**

1.1 Background 2

1.2 Development 2

2 Data Processing **3**

3 Feature Engineering **3**

4 Model Development & Evaluation **4**

4.1 Optimal path planning 5

4.2 Traffic trajectories prediction based on LSTM 8

4.3 Traffic flow prediction based on GCN 10

4.4 Dynamic time weight adjustment 12

5 Innovation & Creativity **13**

6 Practicability & Impact **13**

7 Conclusion **14**

8 References **15**

Appendices **17**

1 Introduction

1.1 Background

In the process of urbanization, traffic congestion and complicated road conditions are increasingly serious, which brings a lot of inconvenience for people to travel [1]. With the increase of urban traffic flow, the traditional traffic management and traffic forecast can not meet the current demand. Therefore, it is of great practical significance to develop and establish an accurate traffic prediction model for improving urban traffic and facilitating people's travel. In recent years, the traffic flow prediction and traffic planning based on vehicle trajectories have attracted wide attention [2][3].

Many traffic prediction models have been established for this purpose, but many of them have their inherent limitations. Simple models such as rule-based systems or linear regression methods are often difficult to capture complex dynamics of actual traffic flows because they rarely consider the nonlinear characteristics of traffic systems. Some traditional models, such as vector autoregression (VAR) [4]–[10] or autoregressive integrated moving average (ARIMA) models [11]–[15], are more focused on statistical analysis of historical data, which will be difficult to adapt to changes in the actual traffic system. Thus, it is still a challenge to develop a traffic prediction model that can accurately predict traffic flow and adapt to complex changes in reality [16], [17].

1.2 Development

Therefore, in this study, we explore in detail the four data sets provided in the title. These data sets include the Microsoft T-Drive Trajectory Dataset in Beijing, Beijing_sevenpart Dataset in Beijing, and PeMS04 and PeMS08 in highways. The data set includes GPS tracks of more than 10,000 taxis, real-time traffic conditions over two working days, and traffic flow information on highways. For the "Microsoft T-Drive Trajectory Dataset", by integrating the trajectory of multiple taxis, we use k-means algorithm to perform cluster analysis on multiple landmarks. After that, we adopt the LSTM model [18]–[20] to predict the next location of vehicles. Dijkstra algorithm [17], [21]–[23] is used for path planning. For the "Beijing_sevenpart Dataset", we first build the road network model according to the road coordinates provided, and plann the shortest path for vehicles according to the time weights provided. For the data sets "PeMS04" and "PeMS08", we used the graph Convolutional network (GCN) [22], [24], [25] to predict and analyze the traffic flow of different sections. Finally, we evaluate the final performance of the model in all aspects by using the test data set, and calculate a variety of evaluation indexes, including root mean square error (RMSE), mean absolute error (MAE), mean absolute percentage error (MAPE), and so on. The stability and reliability of the model are verified and the positive influence of the traffic forecasting model on traffic management and traffic planning is summarized.

Our contributions can be summarized as follows:

- Data cleaning and integration of beijing-severpart, PEMS, T-drive trajectory datasets
- Using K-means, LSTM, GCN, and Dijkstra models for path planning and traffic flow

prediction

- We evaluated the model using various evaluation metrics such as MSE, RMSE, MAPE, etc., and proposed the innovative points of our model

2 Data Processing

- Microsoft T-Drive Trajectory Dataset

  First, we performed a thorough cleaning of the data, including removing anomalous GPS points that deviated significantly from the expected trajectory and removing any duplicate entries. We then used the map matching function of the osmnx library to map GPS points onto the urban road network to ensure data consistency with actual roads. Next, we performed data consolidation, combining different data sources into a unified csv file for full analysis. In addition, data elements such as timestamps and geographic coordinates are appropriately encoded to ensure data consistency.

- PeMS04 & PeMS08 Dataset

  First, we performed data cleaning, which included noise filtering of the data set to identify and mitigate data anomalies due to sensor failures and to clarify outliers. Next, we processed the missing data, addressing the traffic data gap by using the average of adjacent sensor data. We then performed data integration, aggregating data from multiple sensors based on geographic proximity and temporal alignment. When dealing with gaps in the data input, we employ a time series prediction model to fill in the missing parts of the sensor data. Finally, in the data coding phase, we encode time stamps into periodic features that indicate traffic patterns in order to better capture and represent time information.

- Beijing_sevenpart Dataset

  First, we performed data cleaning on the dataset, including noise reduction, identification and correction of erroneous or abnormal road segment data. We then used a similar approach to the T-Drive dataset to map GPS points onto the road network using the map matching feature of the osmnx library. Next, we processed the missing traffic data, estimating the missing value by using data from adjacent sections. Finally, in the data integration stage, we combine road data with POI and use K-means clustering analysis to identify the places where traffic flows are concentrated to analyze the relationship between traffic flow and geographical environment.

3 Feature Engineering

- For Microsoft T-Drive Trajectory Dataset, first of all, feature extraction was carried out on the taxi track data set of T-drive. In the data provided by the data set, time features of each hour and day of the week were extracted from the time stamp. At the same time, we convert the provided taxi ID into a numerical format, which

makes better use of tag encoding. Then, we calculated the location features such as the average speed and driving direction of the taxi from the longitude and latitude coordinate points provided, so that it can be better projected onto the corresponding Beijing road network, and according to the coordinate points with the largest traffic flow in the concentration of longitude and latitude we extracted, we can calculate the road length and driving direction to establish a traffic prediction model.

- For PeMS04 and PeMS08 data sets, we extracted traffic flow, vehicle id changes and other traffic characteristics from the provided data through PCA [26], and reduced the number of given features to reduce computational complexity and prevent overfitting. At the same time, we analyze the time series of vehicle speed and occupancy, and use Z-score standardization [27] to identify the periodicity and trend of traffic flow on highways and expressways to analyze the coordinate points with the most traffic.

- For the Beijing_sevenpart data set, we extracted the real-time traffic conditions and traffic section information reflected in the two days, including the average speed of vehicles on each section, standard difference, etc. After that, we extract its quantity and traffic pattern by analyzing the traffic flow in Beijing. In addition, according to the road network feature information and the number of POI features provided by the data set, we extracted the geometric features of the road to identify the shortest path between two coordinate points and the distribution of POI around, so as to judge its potential impact on the traffic flow.

By performing feature extraction on the four data sets, we successfully integrated the data sources, providing a solid foundation for us to later build a comprehensive and accurate traffic prediction model. These features cover the macro to micro traffic flow information to help us predict the actual traffic situation from many aspects [16], [17].

4 Model Development & Evaluation

Due to the relatively weak correlation between the datasets, we divided them into three categories and constructed models for each category.

1) For the T-drive Taxi Trajectory dataset, we approach the model construction from two perspectives. The first perspective is the trajectory planning model, where we call the **map matching** function of the osmnx library to map GPS points onto the road network. Then use **K-means** clustering to classify landmarks, and use **Dijkstra**[17], [21] algorithm to plan the appropriate shortest path. Another perspective is trajectory prediction. We use an **LSTM** [28] network as the basis, which can handle the complex dependencies of time series data, allowing the model to input a small sequence of latitude and longitude to predict the trajectory.

2) For the PeMS dataset, we construct an adjacency matrix based on sensor distance and connection relationships, and use **GCN** [29] to build a network based on the

traffic information stored within each node to capture the spatiotemporal dependencies between sensor nodes. During the training process, we use sensor data from each time period as model input, and the model output is the predicted traffic value for the future period

3) For the Beijing-sevenpart dataset, we use a map matching function similar to T-drive to map GPS points onto the road network. Based on the speed relationship, obtain the average speed of each small section of road, and use **Dijkstra** to plan the shortest path and infer the predicted time. Unlike T-drive, we not only consider the distance of the path, but also dynamically adjust the weight of each road based on historical and current speed data, in order to plan the path under different road conditions.

4.1 Optimal path planning

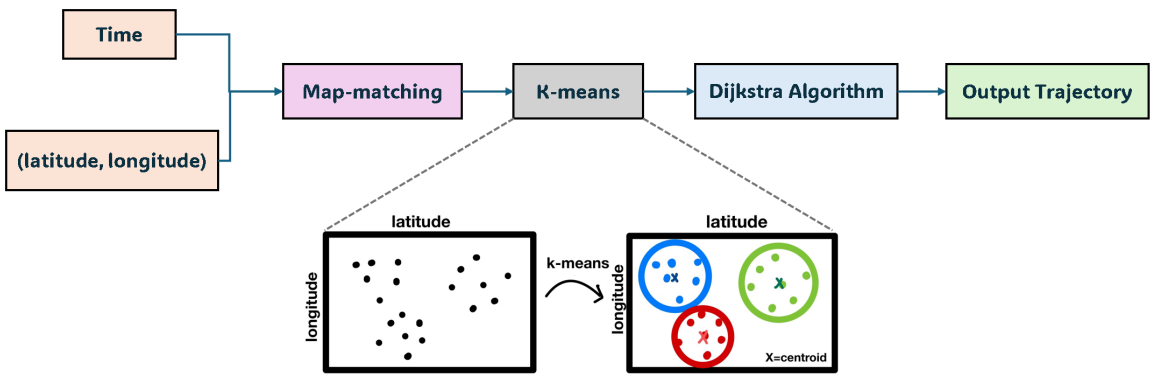

Figure 1: Framework of trajectory planning model

Figure 1 is the basic structure of our our trajectory planning model. Although the original GPS data in the T-drive dataset records the vehicle's driving path, due to the accuracy of GPS signals, these points cannot accurately reflect the actual road on which the vehicle is traveling. To eliminate this bias, we use the map matching function in the osmnx library to map GPS points to the city's road network and calculate the nearest road segment to the GPS point, aligning the GPS points with the road network and accurately mapping these points to the actual roads (Figure 2). Next, we use K-means to cluster 500 points, allowing more GPS trajectories to pass through these points. We then identify these points as landmark points, which are the ones that taxi drivers pass through when entering the area. Because taxi drivers are more aware of whether the road is congested and whether they can reach their destination faster, their trajectory is often the fastest, shortest, and least crowded route. The following are the specific algorithm steps of K-means:

We first randomly select the initial k points as cluster centers, with the horizontal axis being the longitude of GPS and the vertical axis being the dimension such as Figure 1. For each data point in the dataset, calculate its distance from each cluster center and assign

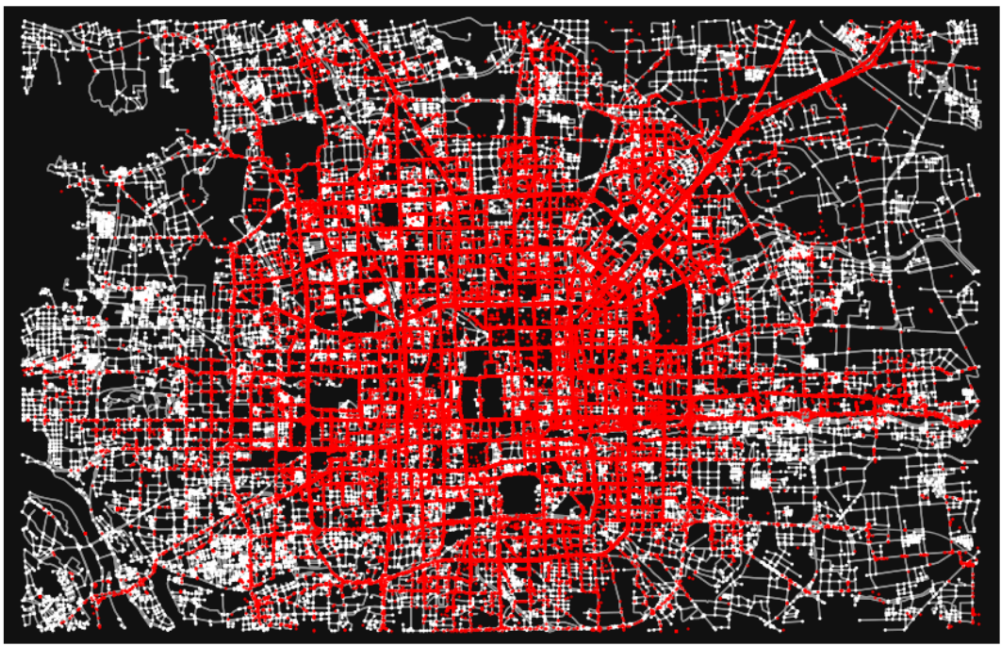

Figure 2: map matching on road network (red points are GPS points)

it to the nearest cluster center. We calculate its Euclidean distance using the following formula:

$$dist(x, c_i) = \sqrt{\sum_{j=1}^{d} (x_j - c_{ij})^2} \tag{1}$$

Among them, x is the data point, c_i is the ith cluster center, d is the dimension of the data, and x_j and c_{ij} are the values of x and c_i on the j th dimension, respectively.

After the allocation is completed, recalculate the centers of each cluster. The new cluster center is the mean of all data points within the cluster, calculated as follows:

$$c_i = \frac{1}{|S_i|} \sum_{x \in S_i} x \tag{2}$$

Among them, S_i is the set of data points for the i th cluster, and $|S_i|$ is the number of data points in this set. Repeat the allocation and update steps until a certain number of iterations are completed before terminating.

We set the landmark in blue and drew it on the road network, as shown in Figure 3. In order to make the path the shortest, we use the Dijkstra algorithm to plan the shortest path, while setting the path to pass through landmarks as much as possible. This way, the planned path is the fastest and least crowded path. We have written dijkstra's pseudocode as follows, where A weighted graph $G = (V, E)$, where V is the set of vertices and E is the set of edges. Each edge $(u, v) \in E$ has a non-negative weight $weight(u, v)$, which represents the distance between node u and node v.

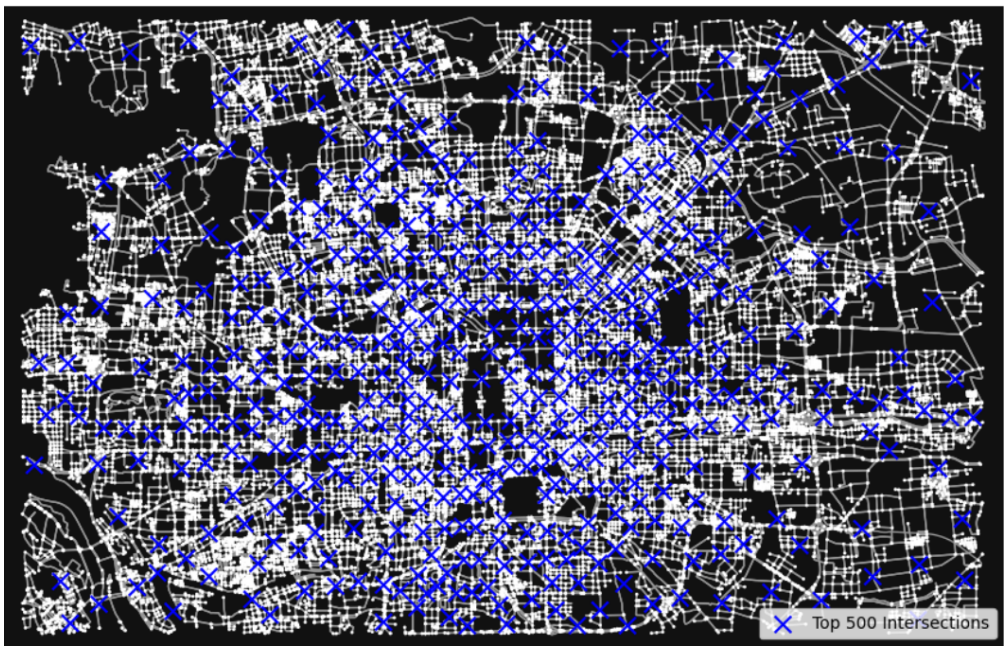

Figure 3: K-means on road network (blue intersections are landmark)

Algorithm 1 Dijkstra's Algorithm

Initialization: Set the starting point s and initialize the distance of all nodes to infinity, i.e., $dist(v) = \infty$, where v is any node in the graph. Set $dist(s) = 0$.
Mark all nodes as unvisited and create an empty priority queue.
Add the starting node s to the priority queue, where the queue is ordered by the current shortest distance.
while the priority queue is not empty **do**
  Extract the node u with the smallest distance from the priority queue.
  Mark node u as visited.
  for each unvisited neighbor v of node u **do**
    Calculate the distance from u to v: $alt = dist(u) + weight(u, v)$
    if $alt < dist(v)$ **then**
      Update $dist(v) = alt$
      Add node v to the priority queue.
    end if
  end for
end while
return The shortest distance from the source s to all other nodes. =0

On this basis, we conducted an experiment where we input arbitrary latitude and longitude coordinates of the starting and ending points. The algorithm can plan the optimal path, as shown in Figure 4.

Figure 4: optimal path on road network (red line is the path)

4.2 Traffic trajectories prediction based on LSTM

The above is our optimal path planning solution, and below we will demonstrate our solution for predicting traffic trajectories based on LSTM[28] (Figure 5).

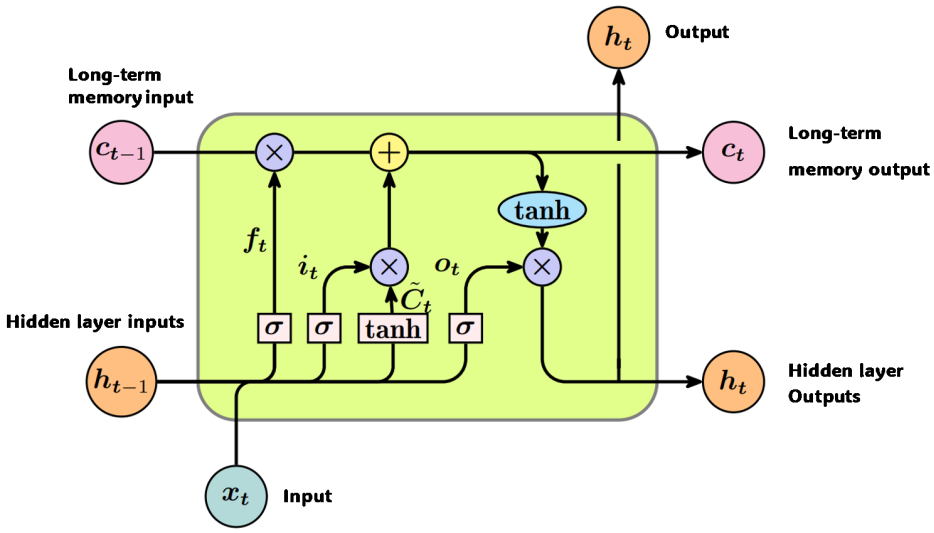

Figure 5: LSTM traffic prediction

When we discuss the trajectory prediction problem of time series data, we choose LSTM (Long short-term memory network)[28] as the core algorithm of this question. LSTM is an advanced recurrent neural network (RNN) architecture that is capable of efficiently pro-

cessing time-dependent data and predicting future events. Compared with traditional RNN, LSTM [28]significantly improves the ability to capture long-term dependencies through its unique gating mechanism, and effectively solves the problem of gradient disappearance encountered by traditional RNN in long series learning, so it has been widely used in the field of time series analysis.

Operations on Dataloader

(1) To train the LSTM model, we convert the raw data into sequential data. Each sequence contains 5 consecutive coordinate points used to predict the next coordinate point.

(2) Due to the scale sensitivity of LSTM to input data, we use MinMaxScaler to standardize the data within the range of 0 to 1.

Hyperparameter fine-tuning

During the model training process, we attempted different hyperparameter configurations, including the number of units in the LSTM layer and the number of epochs trained. We ultimately selected **50 units and 5 epochs**, and in the test set, we also verified the rationality of the hyperparameter configuration

Model evaluation

To ensure the generalization of the model, we need to ensure that the test set consists of data that did not participate in training. Therefore, we divided the training data into an **80 percent training set** and a **20 percent testing set** to monitor the change pattern of the loss function. We evaluated the metrics of MSE and RMSE, and observed a continuous decreasing trend in the loss function during the experiment (Figure 6).

Table 1: Evaluation metrics on LSTM

evaluation metrics	**LSTM**
MSE	1.98724
RMSE	1.40970

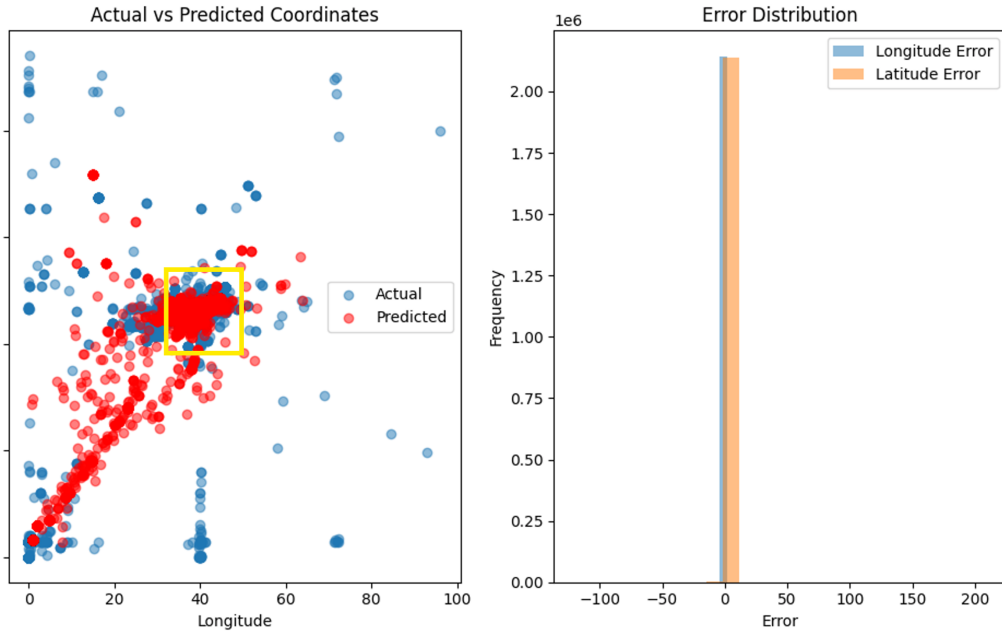

Figure 6: Error visualization of LSTM (see yellow area)

Figure 6 shows the visualization and error plot of the predicted and actual points. Because the longtitude range is between 39-41, the yellow area is the accurate point. We can observe that most of the predicted points can coincide with the actual points, which proves the strong robustness of the model.

4.3 Traffic flow prediction based on GCN

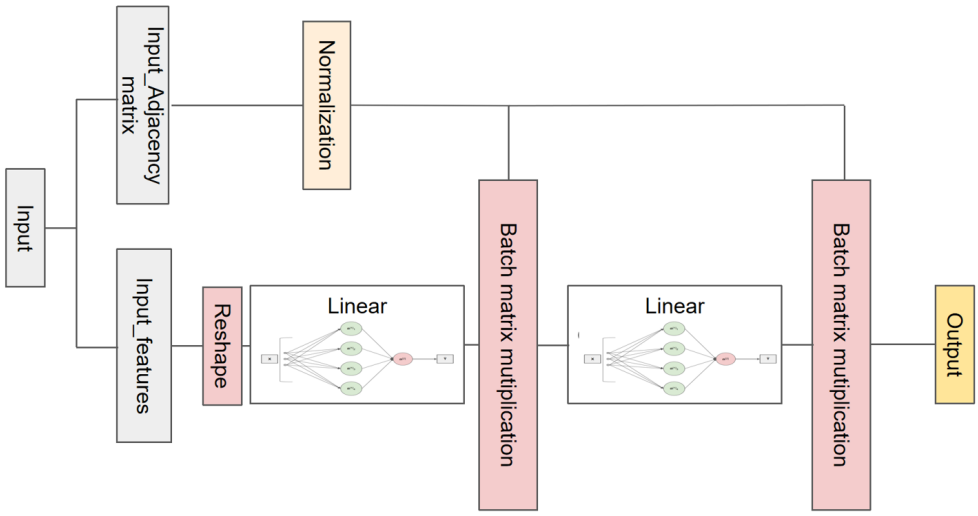

Figure 7: Framework of GCN

Figure 7 is the structure of GCN model. GCN (Graph Convolutional Networks) is an advanced neural network architecture specifically designed to process graph-structured data. Its core advantage is the ability to update the representation of its own nodes by aggregating information from neighboring nodes, a process that enables neural networks to capture and understand complex dependencies between nodes. The update rule for GCNs can be expressed as:

$$h_i^{(l+1)} = \sigma\left(\sum_{j\in\mathcal{N}(i)} \frac{1}{c_{ij}} W^{(l)} h_j^{(l)}\right) \tag{3}$$

where $h_i^{(l)}$ represents the feature representation of node i at layer l, $\mathcal{N}(i)$ is the set of neighboring nodes of node i, c_{ij} is the normalization coefficient, $W^{(l)}$ is the weight matrix at layer l, and σ is the activation function.

Hyperparameter configuration We use the Adam optimizer for training with a learning rate of 0.03. Train the model for 30 epoches. To ensure the reproducibility of the experiment, we used the same random seeds in all experiments.

Model evaluation We evaluated the MSE, RMSE, MAPE, and loss values on the testing machine. During the experiment, we found that all four showed a significant decrease, indicating that our model is reasonable for predicting traffic flow. We have presented the results of 30 epochs in Table 1.

Table 2: Evaluation metrics on GCN

evaluation metrics	**GCN**	
Testloss	0.0081	-
MSE	0.0645	-
RMSE	0.0900	-
MAPE	0.1279%	-

Prediction visualization

We visualized the prediction performance of node 5 for a day, with the x-axis and y-axis representing time (5-minute interval) and traffic flow, respectively (Figure 8). We can see that the predictive performance of the model is very good, and it can clearly predict the future trend.

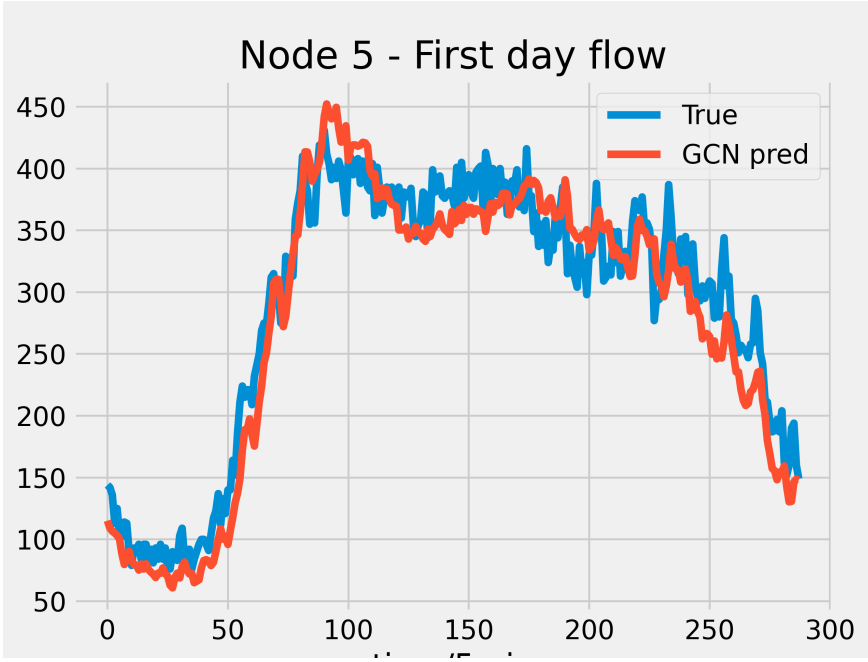

Figure 8: prediction visualization of first day flow on node 5

4.4 Dynamic time weight adjustment

According to the dataset of beijing_sevenpart, we can integrate dynamic weight adjustment based on speed into Dijkstra's algorithm. We use the following formula for calculating weights:

$$w_{ij} = \frac{d_{ij}}{v_{ij}} \tag{4}$$

where:

- w_{ij} is the weight of the road segment from node i to node j.
- d_{ij} is the length of the road segment.
- v_{ij} is the average speed on that segment.

The following is pseudocode for weight adjustment:

Algorithm 2 Dynamic Weight Adjustment for Dijkstra's Algorithm

Initialization: For each edge (u, v) in the graph, calculate the initial weight:
$weight(u, v) = \frac{length(u,v)}{speed(u,v)}$, where $length(u, v)$ is the physical length of the edge and $speed(u, v)$ is the average speed on that edge.
for each time step or change in traffic conditions **do**
  for each edge (u, v) in the graph **do**
    Retrieve updated speed data $speed'(u, v)$ for the edge.
    Calculate the new weight: $weight'(u, v) = \frac{length(u,v)}{speed'(u,v)}$.
    Update the edge weight in the graph.
  end for
end for=0

5 Innovation & Creativity

In this paper, we construct a traffic prediction model that significantly improves the accuracy of traffic flow prediction by comprehensively analyzing and processing historical GPS track data as well as Beijing taxi and road characteristics data. Our model uses a multi-model approach of Long short-term memory network (LSTM)[28] and Graph Convolutional network (GCN)[29] to process complex time series data and graph structured data. LSTM[28] models capture long-term dependencies in time series, which is critical for predicting dynamic changes in traffic flow. At the same time, GCN[29] model can effectively deal with the topology of road network by aggregating the information of adjacent nodes to update the node representation. In addition, we use Dijkstra algorithm[17], [21] to plan the path accurately. Considering the actual situation of the road network, the algorithm can effectively calculate the optimal path of the vehicle. In addition, we dynamically adjust the path weights to accommodate real-time traffic changes, which allows the model to flexibly respond to fluctuations in traffic conditions and provide drivers with more accurate navigation recommendations.

Our model is not only innovative in technology, but also practical in application. It provides powerful support for intelligent transportation systems, which can be used for real-time traffic navigation and path planning of autonomous vehicles. These application scenarios can not only improve the efficiency of road use and reduce traffic congestion, but also reduce vehicle emissions, which has a positive impact on environmental protection. In addition, by optimizing traffic flow, our model also contributes to the improvement of the intelligent level of urban traffic management and provides data support for urban traffic planning and policy formulation, which has significant social and economic value.

6 Practicability & Impact

The traffic prediction model established by us has a wide range of application scenarios. First, the establishment of this prediction model is conducive to the optimization of urban traffic management, which can be used for real-time navigation of intelligent transportation systems and shortest path planning for autonomous vehicles, saving people's travel

time and facilitating their lives. By analyzing the GPS Trajectory data of Beijing taxis in the "Microsoft T-Drive Trajectory Dataset", this model can effectively identify traffic congestion points and provide an optimization scheme for traffic signal control. At the same time, based on the real-time traffic conditions and road network characteristics provided by the "Beijing_sevenpart Dataset", the model can optimize the prediction results and provide travelers with more accurate route recommendations. The sensor records in the "PeMS04" and "PeMS08" datasets provide dynamic traffic data to the model, thereby enhancing its responsiveness to changes in traffic flow. I think the first application scenario of this model can be today's "Apollo Go" driverless car. This model can be applied to this new technology industry to help it intelligently plan the shortest path, improve energy utilization and driving efficiency, and provide passengers with more comfortable and reliable travel services, so as to help the enterprise gain an advantage in the highly competitive autonomous driving market.

In terms of the potential impact of this model, firstly, through intelligent planning of the shortest path for vehicles, this model can effectively reduce road traffic congestion, improve people's travel efficiency, reduce vehicle exhaust emissions and thus reduce its pollution to the environment, and realize the concept of green development. Next, by predicting traffic conditions in real time, road safety can be effectively improved, traffic accidents can be prevented and the overall traffic flow can be optimized. In addition, the application of this model can effectively promote the development of the field of transportation technology innovation, and promote the progress of related technologies such as unmanned driving, artificial intelligence and so on. In general, the traffic prediction model not only effectively improves the efficiency and safety of the traffic system, but also contributes to the development of the environment and the emerging technology industry, which can bring double social and economic benefits.

7 Conclusion

In this study, we preprocessed the beijing-severpart, PEMS, and T-drive trajectory datasets. Through data cleaning, integration, and feature engineering, we have provided a solid data foundation for the model. On this basis, we have successfully developed a traffic prediction model based on LSTM[28] and GCN[29]. LSTM networks, with their excellent time series analysis capabilities, effectively capture the dynamic changes and long-term dependencies of traffic flow. Meanwhile, the GCN model enhances the accuracy of predicting traffic flow changes by analyzing the topological structure of the road network. In addition, we optimized the Dijkstra algorithm[17], [21] through dynamic weight adjustment, enabling path planning to adapt to real-time traffic conditions and further enhancing the practicality of the model. Our model has been validated on multiple datasets, and the results show that it exhibits high accuracy and reliability in both traffic flow prediction and path planning. This achievement not only achieves technological innovation, but also demonstrates enormous potential and value in practical applications. The results of this study are of great significance for improving the intelligence level of urban transportation systems. Through traffic prediction and path planning, our model can provide strong support for urban traffic management.

8 References

References

[1] J. Shang, Y. Zheng, W. Tong, E. Chang, and Y. Yu, "Inferring gas consumption and pollution emission of vehicles throughout a city," *Proceedings of the 20th ACM SIGKDD international conference on Knowledge discovery and data mining*, 2014.

[2] S. A. Sayed, Y. Abdel-Hamid, and H. A. Hefny, "Artificial intelligence-based traffic flow prediction: A comprehensive review," *Journal of Electrical Systems and Information Technology*, vol. 10, no. 1, p. 13, 2023.

[3] M. Shaygan, C. Meese, W. Li, X. (Zhao, and M. Nejad, "Traffic prediction using artificial intelligence: Review of recent advances and emerging opportunities," *Transportation Research Part C: Emerging Technologies*, vol. 145, p. 103 921, 2022.

[4] B. S. Bernanke and J. P. Blevins, "Vars, error correction, and the great crash," *Brookings Papers on Economic Activity*, vol. 1992, no. 2, pp. 1–60, 1992.

[5] T. Doan, R. B. Litterman, and C. A. Sims, "Forecasting and conditional projection using realistic prior distributions," *Econometric Reviews*, vol. 3, no. 1, pp. 1–100, 1984.

[6] J. D. Hamilton, *Time series analysis*. Princeton University Press, 1994.

[7] H. Lütkepohl, *New introduction to multiple time series analysis*. Springer, 2005.

[8] G. Peersman and R. Straub, "Does fiscal policy matter in the euro area? evidence from a structural var," *Journal of Economic Dynamics and Control*, vol. 28, no. 11, pp. 2163–2186, 2004.

[9] C. A. Sims, "Macroeconomics and reality," *Econometrica*, vol. 48, no. 1, pp. 1–48, 1980.

[10] C. A. Sims, "Policy analysis with econometric models," *Brookings Papers on Economic Activity*, vol. 1982, no. 1, pp. 107–152, 1982.

[11] G. E. P. Box, G. M. Jenkins, G. C. Reinsel, and G. M. Ljung, *Time series analysis: forecasting and control*. Wiley, 2015.

[12] W. L. Enders, *Applied econometric time series*. Wiley, 2014.

[13] P. J. Brockwell and R. A. Davis, *Introduction to time series and forecasting*. Springer, 2016.

[14] R. H. Shumway and D. S. Stoffer, *Time series analysis and its applications: with R examples*. Springer, 2017.

[15] R. J. Hyndman and G. Athanasopoulos, *Forecasting: principles and practice*. OTexts, 2018.

[16] R. Yu, Y. Zhang, N. Zheng, and J. Wang, "Deep learning-based traffic flow prediction: A comprehensive overview," *IEEE Transactions on Intelligent Transportation Systems*, 2021.

[17] Z. Zhang and W. Wang, "Deep learning for traffic flow prediction: A comparative study and an integrated framework," *IEEE Transactions on Intelligent Transportation Systems*, vol. 22, no. 11, pp. 4825–4838, 2021.

[18] Z. Zhou and J. Wang, "Lstm-based traffic speed prediction using remote sensing data," *ISPRS Journal of Photogrammetry and Remote Sensing*, vol. 170, pp. 53–67, 2021.

[19] T. Lin, H. Wang, and J. Gao, "A deep learning approach for traffic flow prediction using lstm," *IEEE Access*, vol. 10, pp. 20 680–20 691, 2022.

[20] H. Liu and H. Darabi, "Deep learning based traffic speed prediction and anomaly detection: A case study of a large-scale freeway network," *Transportation Research Part C: Emerging Technologies*, vol. 129, p. 103 324, 2021.

[21] Z. Li and Z. Cai, "A hybrid algorithm based on improved dijkstra and genetic algorithm for the shortest path problem," *Soft Computing*, vol. 24, no. 6, pp. 4489–4500, 2020.

[22] H. Wang, W. Shi, and X. Zhang, "A multi-scale deep learning model for short-term traffic flow prediction," *Knowledge-Based Systems*, vol. 226, p. 107 359, 2022.

[23] E. B. Khalil and M. E. Ben-Akiva, "Real-time traffic prediction with probe and sensor data: A bayesian approach," *Transportation Research Part C: Emerging Technologies*, vol. 95, pp. 300–315, 2018.

[24] J. Zhang and Y. Wang, "A graph convolutional network-based approach for traffic flow prediction," *Transportation Research Part C: Emerging Technologies*, vol. 137, p. 103 466, 2022.

[25] Y. Li, R. Yu, Z. Wang, and J. Wang, "Trajectory prediction with graph convolutional networks," *IEEE Transactions on Intelligent Transportation Systems*, vol. 22, no. 6, pp. 2669–2682, 2021.

[26] H. Abdi and L. J. Williams, "Principal component analysis," *Wiley Interdisciplinary Reviews: Computational Statistics*, vol. 2, no. 4, pp. 433–459, 2010.

[27] K. Zhang and P. Odell, "A note on the uniform effectiveness of the z-score for detecting outlying observations," *The American Statistician*, vol. 44, no. 2, pp. 146–147, 1990.

[28] S. Hochreiter and J. Schmidhuber, "Long short-term memory," *Neural Computation*, vol. 9, no. 8, pp. 1735–1780, 1997. DOI: `10.1162/neco.1997.9.8.1735`.

[29] T. N. Kipf and M. Welling, *Semi-supervised classification with graph convolutional networks*, 2017. arXiv: `1609.02907 [cs.LG]`. [Online]. Available: `https://arxiv.org/abs/1609.02907`.

Appendices

The Code is avaliable on https://github.com/Gmasterzhangxinyang/code-for-big-data-Competition